TOTO

TECHNICAL DATA SHEET

AL-OMRAN Trading Co.
Riyadh – Saudi Arabia
Website: alomrantrd.com

Tel: 0593851408
WhatsApp: 0595333434
Email: project@alomran.sa

DIGITAL CATALOGUE SCAN HERE

PRODUCT DETAILS

Type	Wall-Mount Single Lever Lavatory Faucet
Item Code	TLG02311D
Range	GR - Series
Material	Brass
Colour	Chrome

Technical Details and Description :

TOTO – GR - Wall-Mount Single Lever Lavatory Faucet (Long Spout) (w/o Pop-up Waste)

IMAGE

ENVIRONMENTAL & TECHNICAL DATA

Flow Rate	0.05 ~ 1.0 Mpa

Flow Chart : TBA

Design Concept is Gorgeous and Organic.
TOTO original cartridge for smooth control
High corrosion resistance plating
TOTO aerated water technology, ECOCAP adds air to the water to achieve full water jet with less amount of water usage.

SASO

PRESSURE

TECHNICAL DRAWING

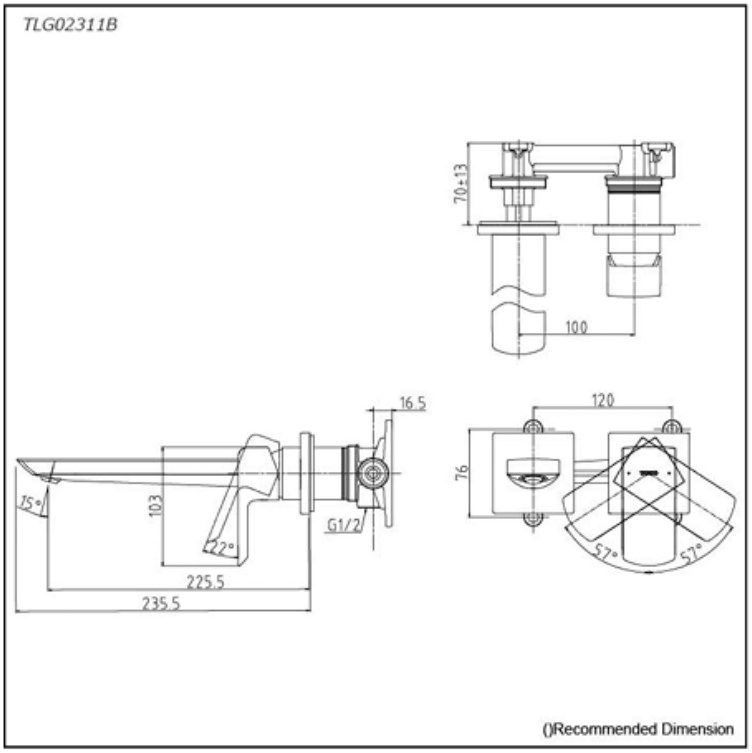

NOTE : This (TLG02311D) MAIN PRODUCT CODE not change - only will be change MAIN PRODUCT CODE end of Letter's Every Year as per SASO request

CERTIFICATION / STANDARDS

Warranty	1 Year
Standards	TOTO Industrial Standards(JIS)

REMARKS

COMPONENTS

Note: All recommended installation dimension are for reference only.

TOTO

TECHNICAL DATA SHEET

AL-OMRAN Trading Co.
Riyadh – Saudi Arabia
Website: alomrantrd.com

Tel: 0593851408
WhatsApp: 0595333434
Email: project@alomran.sa

DIGITAL CATALOGUE SCAN HERE

PRODUCT DETAILS

Type	Wall-Mount Single Lever Lavatory Faucet
Item Code	TLG02311_BN
Range	GR - Series
Material	Brass
Colour	Brushed Nickel

Technical Details and Description :

TOTO – GR - Wall-Mount Single Lever Lavatory Faucet (Long Spout) (w/o Pop-up Waste)

IMAGE

ENVIRONMENTAL & TECHNICAL DATA

Flow Rate	0.05 ~ 1.0 Mpa

Flow Chart : TBA

Design Concept is Gorgeous and Organic.
TOTO original cartridge for smooth control
High corrosion resistance plating
TOTO aerated water technology, ECOCAP adds air to the water to achieve full water jet with less amount of water usage.

PRESSURE

TECHNICAL DRAWING

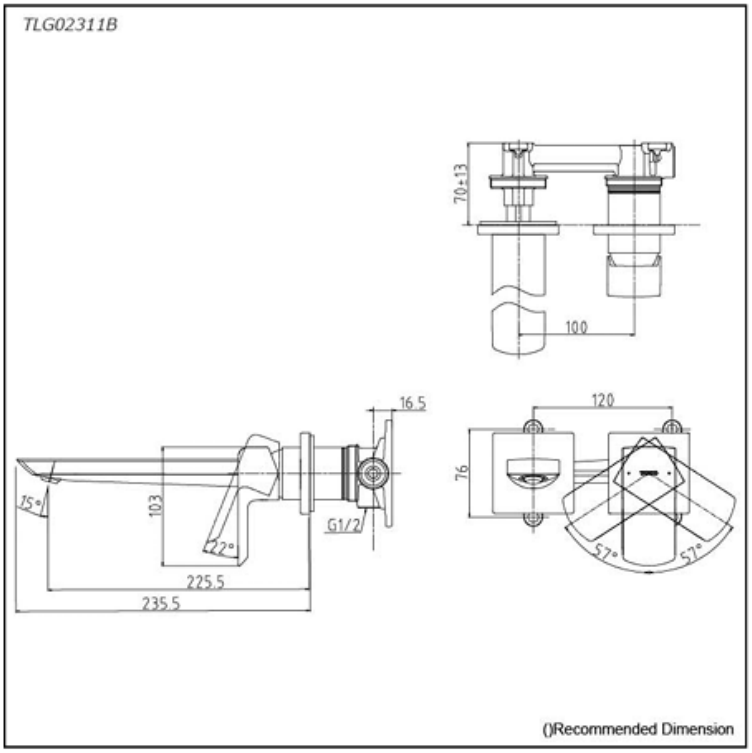

NOTE : This (TLG02311D) MAIN PRODUCT CODE not change - only will be change MAIN PRODUCT CODE end of Letter's Every Year as per SASO request

CERTIFICATION / STANDARDS

Warranty	1 Year
Standards	TOTO Industrial Standards(JIS)

REMARKS

COMPONENTS

Note: All recommended installation dimension are for reference only.

TOTO

TECHNICAL DATA SHEET

AL-OMRAN Trading Co.
Riyadh – Saudi Arabia
Website: alomrantrd.com

Tel: 0593851408
WhatsApp: 0595333434
Email: project@alomran.sa

DIGITAL CATALOGUE SCAN HERE

PRODUCT DETAILS

Type	Wall-Mount Single Lever Lavatory Faucet
Item Code	TLG02311_MBL
Range	GR - Series
Material	Brass
Colour	Matte Black

Technical Details and Description :

TOTO – GR - Wall-Mount Single Lever Lavatory Faucet (Long Spout) (w/o Pop-up Waste)

IMAGE

ENVIRONMENTAL & TECHNICAL DATA

Flow Rate	0.05 ~ 1.0 Mpa

Flow Chart : TBA

Design Concept is Gorgeous and Organic.
TOTO original cartridge for smooth control
High corrosion resistance plating
TOTO aerated water technology, ECOCAP adds air to the water to achieve full water jet with less amount of water usage.

SASO

PRESSURE

TECHNICAL DRAWING

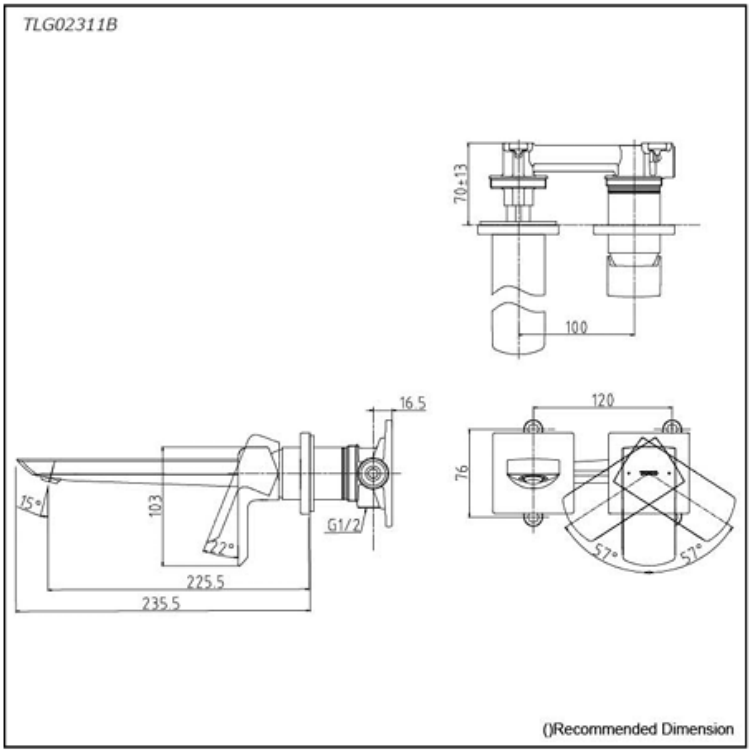

NOTE : This (TLG02311D) MAIN PRODUCT CODE not change - only will be change MAIN PRODUCT CODE end of Letter's Every Year as per SASO request

CERTIFICATION / STANDARDS

Warranty	1 Year
Standards	TOTO Industrial Standards(JIS)

REMARKS

COMPONENTS

Note: All recommended installation dimension are for reference only.

TOTO

TECHNICAL DATA SHEET

AL-OMRAN Trading Co.
Riyadh – Saudi Arabia
Website: alomrantrd.com

Tel: 0593851408
WhatsApp: 0595333434
Email: project@alomran.sa

DIGITAL CATALOGUE SCAN HERE

PRODUCT DETAILS

Type	Wall-Mount Single Lever Lavatory Faucet
Item Code	TLG02311_BFG
Range	GR - Series
Material	Brass
Colour	Brushed French Gold

Technical Details and Description :

TOTO – GR - Wall-Mount Single Lever Lavatory Faucet (Long Spout) (w/o Pop-up Waste)

IMAGE

ENVIRONMENTAL & TECHNICAL DATA

Flow Rate	0.05 ~ 1.0 Mpa

Flow Chart : TBA

Design Concept is Gorgeous and Organic.
TOTO original cartridge for smooth control
High corrosion resistance plating
TOTO aerated water technology, ECOCAP adds air to the water to achieve full water jet with less amount of water usage.

SASO

PRESSURE

TECHNICAL DRAWING

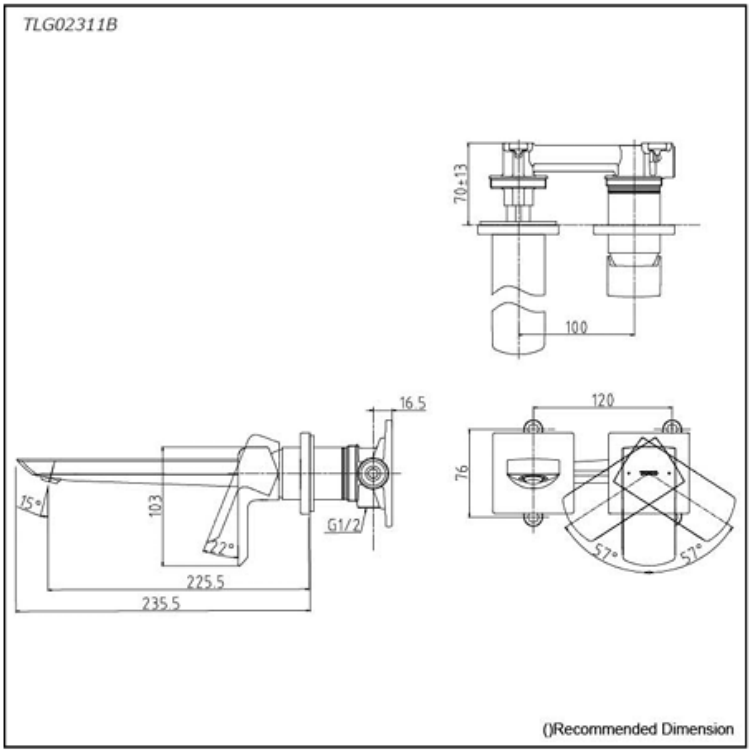

NOTE : This (TLG02311D) MAIN PRODUCT CODE not change - only will be change MAIN PRODUCT CODE end of Letter's Every Year as per SASO request

CERTIFICATION / STANDARDS

Warranty	1 Year
Standards	TOTO Industrial Standards(JIS)

REMARKS

COMPONENTS

Note: All recommended installation dimension are for reference only.

TOTO

TECHNICAL DATA SHEET

AL-OMRAN Trading Co.
Riyadh – Saudi Arabia
Website: alomrantrd.com

Tel: 0593851408
WhatsApp: 0595333434
Email: project@alomran.sa

DIGITAL CATALOGUE SCAN HERE

PRODUCT DETAILS

Type	Wall-Mount Single Lever Lavatory Faucet
Item Code	TLG02311_PFG
Range	GR - Series
Material	Brass
Colour	Polished French Gold

Technical Details and Description :

TOTO – GR - Wall-Mount Single Lever Lavatory Faucet (Long Spout) (w/o Pop-up Waste)

IMAGE

ENVIRONMENTAL & TECHNICAL DATA

Flow Rate	0.05 ~ 1.0 Mpa

Flow Chart : TBA

Design Concept is Gorgeous and Organic.
TOTO original cartridge for smooth control
High corrosion resistance plating
TOTO aerated water technology, ECOCAP adds air to the water to achieve full water jet with less amount of water usage.

PRESSURE

TECHNICAL DRAWING

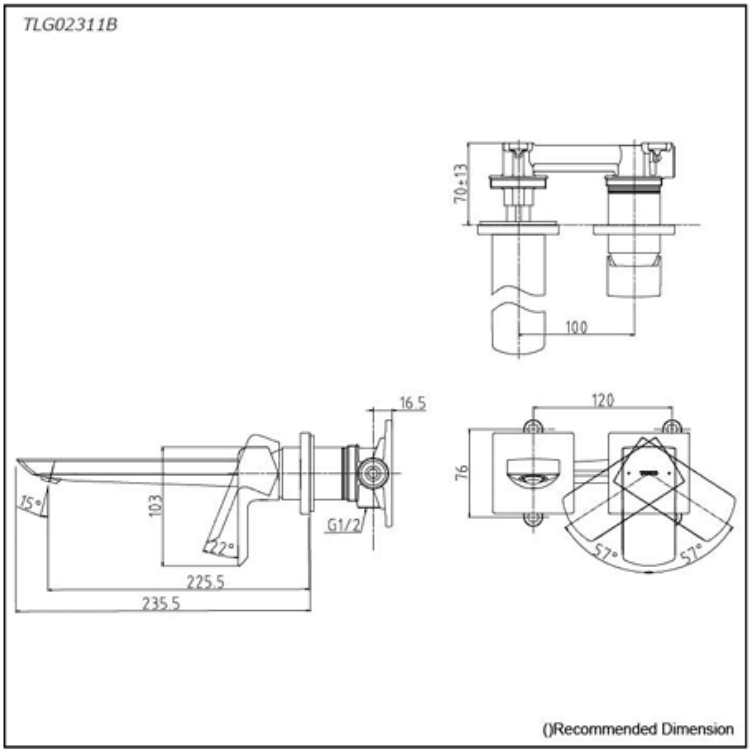

NOTE : This (TLG02311D) MAIN PRODUCT CODE not change - only will be change MAIN PRODUCT CODE end of Letter's Every Year as per SASO request

CERTIFICATION / STANDARDS

Warranty	1 Year
Standards	TOTO Industrial Standards(JIS)

REMARKS

COMPONENTS

Note: All recommended installation dimension are for reference only.