TOTO

TECHNICAL DATA SHEET

AL-OMRAN Trading Co.
Riyadh – Saudi Arabia
Website: alomrantrd.com

Tel: 0593851408
WhatsApp: 0595333434
Email: project@alomran.sa

DIGITAL CATALOGUE
SCAN HERE

PRODUCT DETAILS

Type	WALL HUNG TOILET
Item Code	CW542ME5UNW1
Range	CONTEMPORARY I
Material	Vitreous China
Colour	White

Technical Details and Description :

TOTO CONTEMPORARY I- WALL HUNG TOILET
Flush system: TORNADO FLUSH
Rough-in: H=220 mm
Bowl Shape: D-Shape
Size: 380Wx580Dx335H mm

ENVIRONMENTAL & TECHNICAL DATA

Flow Rate	0.05MPa~0.75MPa

Water Use : 4.5L / 3L

- **Sleek and Stylish Design**
- **TORNADO FLUSH for powerful flushing effect with less amount of water**
- **WATER SAVING**
- **CEFIONTECT technology; super smooth ion barrier glazing for a clean Toilet bowl**
- **Seat & Cover are not included**

- **CW542ME5UNW1 D-Shape Wall Hung Closet Bowl (P-Trap) (w/o Concealed Washlet Connection) (Rough-in 220)**
- **Optional Parts**
- **WH172A Concealed Cistern w/Frame**
- **TC513A Seat & Cover**
- **MB174P Flush Panel**
- **MB170P Flush Panel**
- **MB176G Flush Panel**
- **NOTE DO NOT COUPLE THIS WC WITH FLUSH VALVE**

CERTIFICATION / STANDARDS

Warranty	1 Year
Standards	TOTO Industrial Standards(JIS)

REMARKS

IMAGE

TECHNICAL DRAWING

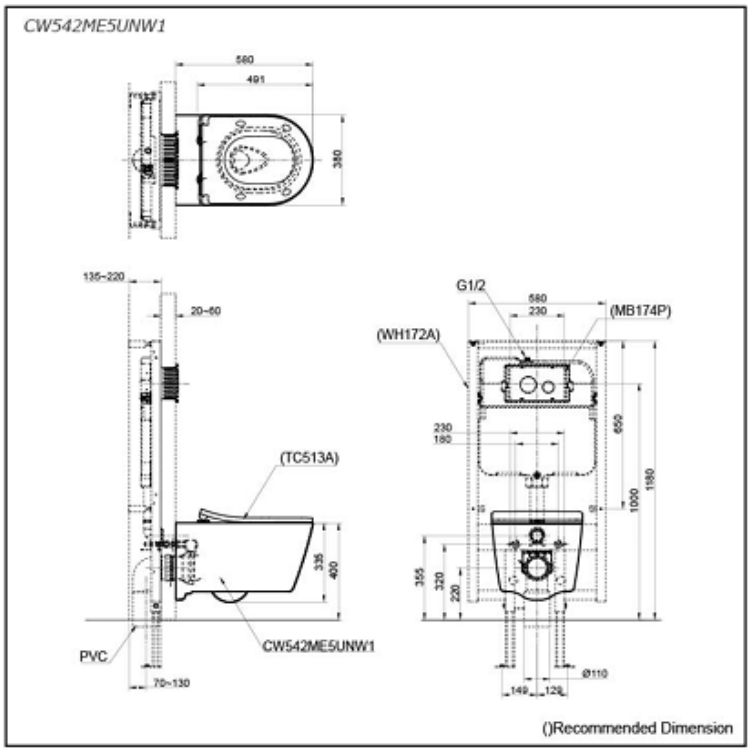

NOTE : This (CW542ME5UNW1) MAIN PRODUCT CODE not change - only will be change MAIN PRODUCT CODE end of Letter's Every Year as per SASO request

COMPONENTS

Note: All recommended installation dimension are for reference only.